project name

address

GENERAL NOTES

1. THESE DRAWINGS HAVE BEEN PREPARED IN ACCORDANCE WITH THE SUPPLIED CONSTRUCTION DRAWINGS, SPECIFICATIONS AND _____ PROPOSAL.

2. REVISIONS, ADDITIONS, OR DEDUCTIONS REQUIRE WRITTEN AUTHORIZATION OR A REVISED PURCHASE ORDER ACCOMPANYING RETURNED PRINTS.

3. _____ WILL ASSUME NO RESPONSIBILITY BEYOND FABRICATION IN ACCORDANCE WITH THESE DRAWINGS OR FROM ERRORS RESULTING FROM THE USE OF THESE DRAWINGS BY OTHER TRADES.

4. THE PURPOSE OF THESE SHOP DRAWINGS IS TO CLARIFY AND DEFINE THE SCOPE OF WORK THAT THE ARCHITECT HAS INTENDED FOR THIS PARTICULAR PROJECT.

5. APPROVAL BY THE ARCHITECT AND CUSTOMER SHALL CONSTITUTE ACCEPTANCE OF THESE DRAWINGS AS THE BASIS OF WORK THAT WILL BE SUPPLIED BY _____ . THESE DRAWINGS REPRESENT OUR INTERPRETATION OF THE ARCHITECTS INTENT DELIVERED THROUGH CONSTRUCTION DRAWINGS AND SPECIFICATIONS.

6. IF THESE SHOP DRAWINGS DO NOT REPRESENT THE ARCHITECTS SPECIFIC INTENT OF REPRESENTED WORK, IT IS THE ARCHITECTS RESPONSIBILITY TO MAKE THE NECESSARY CHANGES TO THESE PRINTS.

7. REQUESTS FOR REVISIONS AFTER _____ HAS BEEN AUTHORIZED TO PROCEED WITH FABRICATION WILL BE SUBJECT TO A MINIMUM HANDLING CHARGE PLUS THE COST OF FABRICATED MATERIALS.

8. FABRICATION WILL NOT BEGIN UNTIL _____ HAS RECEIVED A SIGNED COPY OF THESE DRAWINGS. ALL DIMENSIONS REQUIRED FOR SHALL BE FIELD VERIFIED OR RELEASED BY THE GENERAL CONTRACTOR PRIOR TO FABRICATION.

9. IT IS THE ARCHITECTS RESPONSIBILITY TO VERIFY PARTICULAR REQUIREMENTS INCLUDING, BUT NOT LIMITED TO; MATERIAL TYPE, GLASS THICKNESS, FRAMING MATERIAL, FRAMING FINISHES, DOOR TYPES, HARDWARE SCHEDULE, ETC.

10. ONCE APPROVED BY THE ARCHITECT THESE SHOP DRAWING WILL BECOME A PART OF THE CONTRACT BETWEEN _____ AND THE GENERAL CONTRACTOR AND ALL WORK SHALL BE COMPLETED AS IN SAID DETAILED SHOP DRAWINGS. THESE SHOP DRAWINGS SHALL SUPERSEDE ALL CONTRACT DRAWINGS AND SPECIFICATIONS.

11. ERECTION AND GLAZING PROCEDURES ARE TO BE IN ACCORDANCE WITH PROCEDURES IN THE INSTALLATION MANUAL.

OLDCASTLE BE SYSTEM(S) USED

FG6000 THERMAL MULTIPLANE STOREFRONT FRAMING SYSTEM, CENTER PLANE, OUTSIDE GLAZED, SCREW SPLINE ASSEMBLY, (2" X 6")

FG2000 STOREFRONT FRAMING SYSTEM, CENTER PLANE, OUTSIDE GLAZED, SCREW SPLINE ASSEMBLY, (1 3/4" X 4 1/2")

MS-375 MEDIUM STILE DOORS

GLAZING SCHEDULE

G1 = 1" CLEAR WITH SNX 51/23 GLASS

G2 = 1/4" CLEAR GLASS

* INDICATES TEMPERED GLAZING

FINISH

BRONZE ANODIZED

SEALANT SCHEDULE

PERIMETER SEALANT SHALL BE 890 PECORA, COLOR TO BE SELECTED.

SHEET SUMMARY

101	COVER
102-103	DOOR & HARDWARE SCHEDULE
201	KEY PLAN
301-303	ELEVATIONS
401-404	FG6000 THERMAL DETAILS
501-505	FG2000 DETAILS

TOTAL (16) SHEETS

ABBREVIATIONS / SYMBOLS

℄ = CENTER LINE
DO = DOOR OPENING
DLO = DAY LIGHT OPENING
DS = DOOR SIZE
FH = FRAME HEIGHT
FW = FRAME WIDTH
GC = GENERAL CONTRACTOR
NB___ = NOT BY _____
NTS = NOT TO SCALE
RO = ROUGH OPENING
V.I.F. = VERIFY IN THE FIELD

1 = REVISION

X / 30X = ELEVATION

= DETAIL CUT

FINISH FLOOR 0'-0" = BENCH MARK

X / X = SECTION CALLOUT

G* = GLASS TYPE

APPROVAL AREA

ARCHITECT

name
address

GENERAL CONTRACTOR

name
address

GLAZING CONTRACTOR

name
address

ADDITIONAL NOTES

ARCHITECTURAL DRAWINGS:
REVISION 2, GMP UPDATE, 06/09/2023

logo

VISION DRAFTING, INC.
shop drawings engineering
TEL. (470) 406-8783
RGRAHAM@VISIONDRAFTING.NET
WWW.VISIONDRAFTING.NET

REVISION NO.	DATE	BY

PRINTS ISSUED FOR	DATE	BY
1ST APPROVAL	06/24/2024	B.G.

ARCHITECT/LOCATION: name address

PROJECT NAME/LOCATION: project name address

JOB NO. 316

SCALE: N.T.S.

SHEET NO. COVER 101

HARDWARE SET FOR SINGLE STOREFRONT ENTRANCE A04.1, A04.2, A04.3 & A09.1			
QUANTITY	HARDWARE TYPE	FINISH	MANUFACTURER / PART NUMBER
1	TOP, BOTTOM & INTERMEDIATE OFFSET PIVOT	BRONZE	OLDCASTLE BE / STANDARD
1	SURFACE MOUNT CLOSER	BRONZE	NORTON / 1600
1	RIM PANIC	BRONZE	ADAMS RITE / 8400
1	ELECTRIC STRIKE	BRONZE	ADAMS RITE / AR7140
1	RIM CYLINDER	BRONZE	OLDCASTLE BE / STANDARD
1	OFFSET PULL HANDLE	BRONZE	OLDCASTLE BE / STANDARD
1	THRESHOLD	MILL	OLDCASTLE BE / STANDARD
1	SWEEP	BRONZE	OLDCASTLE BE / STANDARD

1 HARDWARE SCHEDULE
SCALE: N.T.S.

TYPICAL ELEVATION NOTES:
- PLEASE VERIFY ALL DIMENSIONS PRIOR TO FABRICATION AND INSTALLATION.
- PLEASE VERIFY ALL GLAZING MARKS

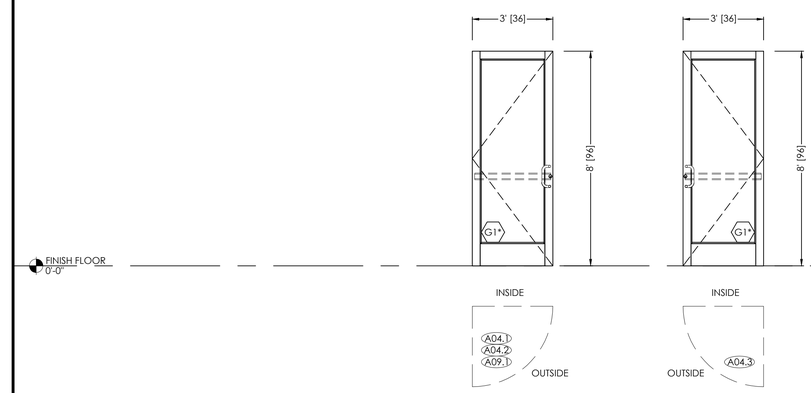

2 DOOR ELEVATION
SCALE: 3/8" = 1'-0"

MS-375 MEDIUM STILE DOORS

HARDWARE SET FOR SINGLE STOREFRONT ENTRANCE A08, A09.2			
QUANTITY	HARDWARE TYPE	FINISH	MANUFACTURER / PART NUMBER
1	TOP, BOTTOM & INTERMEDIATE OFFSET PIVOT	BRONZE	OLDCASTLE BE / STANDARD
1	SURFACE MOUNT CLOSER	BRONZE	NORTON / 1600
1	DEADLOCK WITH CYLINDER & THUMB TURN	BRONZE	ADAMS RITE / MS1850
1	PUSH BAR / OFFSET PULL HANDLE SET	BRONZE	OLDCASTLE BE / STANDARD
1	THRESHOLD	MILL	OLDCASTLE BE / STANDARD
1	SWEEP	BRONZE	OLDCASTLE BE / STANDARD

3 HARDWARE SCHEDULE
SCALE: N.T.S.

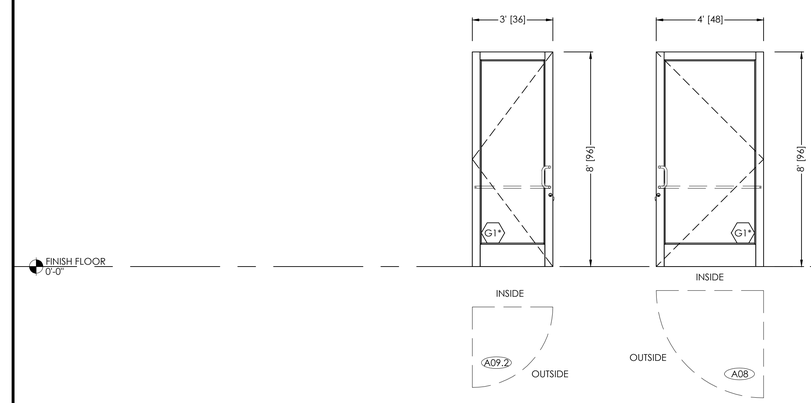

4 DOOR ELEVATION
SCALE: 3/8" = 1'-0"

MS-375 MEDIUM STILE DOORS

HARDWARE SET FOR SINGLE STOREFRONT ENTRANCE A01			
QUANTITY	HARDWARE TYPE	FINISH	MANUFACTURER / PART NUMBER
2	TOP, BOTTOM & INTERMEDIATE OFFSET PIVOT	BRONZE	OLDCASTLE BE / STANDARD
2	SURFACE MOUNT CLOSER	BRONZE	NORTON / 1600
1	DEADLOCK WITH CYLINDER & THUMB TURN (ACTIVE)	BRONZE	ADAMS RITE / MS1850
1	TOP & BOTTOM FLUSH BOLTS (INACTIVE)	BRONZE	OLDCASTLE BE / STANDARD
2	PUSH BAR / OFFSET PULL HANDLE SETS	BRONZE	OLDCASTLE BE / STANDARD
1	THRESHOLD	MILL	OLDCASTLE BE / STANDARD
2	SWEEPS	BRONZE	OLDCASTLE BE / STANDARD

5 HARDWARE SCHEDULE
SCALE: N.T.S.

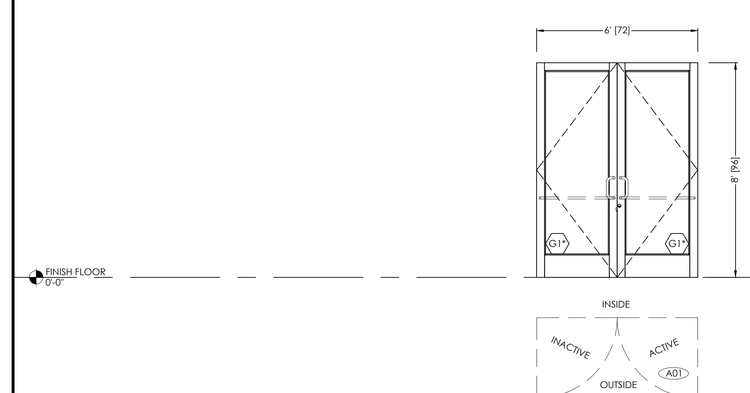

6 DOOR ELEVATION
SCALE: 3/8" = 1'-0"

MS-375 MEDIUM STILE DOORS

logo

VISION DRAFTING, INC.
shop drawings engineering
TEL. (470) 406-8783
RGRAHAM@VISIONDRAFTING.NET
WWW.VISIONDRAFTING.NET

REVISION NO.	DATE	BY

PRINTS ISSUED FOR 1ST APPROVAL	DATE 06/24/2024	BY B.G.

ARCHITECT/LOCATION
name
address

PROJECT NAME/LOCATION
project name
address

JOB NO. 316

SCALE: 3/8" = 1'-0"

SHEET NO.
DR & HW
102

HARDWARE SET FOR SINGLE STOREFRONT ENTRANCE A10, A13, A16 & A17			
QUANTITY	HARDWARE TYPE	FINISH	MANUFACTURER / PART NUMBER
1	TOP, BOTTOM & INTERMEDIATE OFFSET PIVOT	BRONZE	OLDCASTLE BE / STANDARD
1	SURFACE MOUNT CLOSER	BRONZE	NORTON / 1600
1	DEADLOCK WITH CYLINDER & THUMB TURN	BRONZE	ADAMS RITE / MS1850
1	PUSH BAR / OFFSET PULL HANDLE SET	BRONZE	OLDCASTLE BE / STANDARD

1 HARDWARE SCHEDULE
SCALE: N.T.S.

TYPICAL ELEVATION NOTES:
- PLEASE VERIFY ALL DIMENSIONS PRIOR TO FABRICATION AND INSTALLATION.
- PLEASE VERIFY ALL GLAZING MARKS

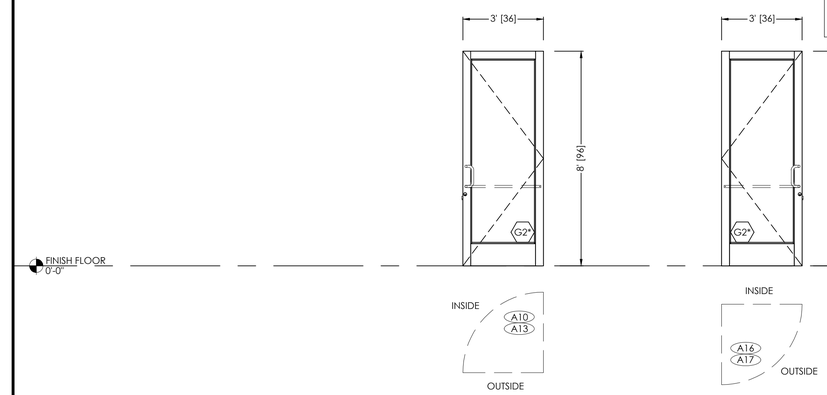

2 DOOR ELEVATION
SCALE: 3/8" = 1'-0"

MS-375 MEDIUM STILE DOORS

HARDWARE SET FOR PAIRED STOREFRONT ENTRANCE A14			
QUANTITY	HARDWARE TYPE	FINISH	MANUFACTURER / PART NUMBER
2	TOP, BOTTOM & INTERMEDIATE OFFSET PIVOTS	BRONZE	OLDCASTLE BE / STANDARD
2	SURFACE MOUNT CLOSERS	BRONZE	NORTON / 1600
1	DEADLOCK WITH CYLINDER & THUMB TURN (ACTIVE)	BRONZE	ADAMS RITE / MS1850
1	TOP & BOTTOM FLUSH BOLTS (INACTIVE)	BRONZE	OLDCASTLE BE / STANDARD
2	PUSH BAR / OFFSET PULL HANDLE SETS	BRONZE	OLDCASTLE BE / STANDARD

3 HARDWARE SCHEDULE
SCALE: N.T.S.

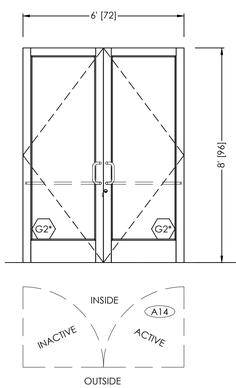

4 DOOR ELEVATION
SCALE: 3/8" = 1'-0"

MS-375 MEDIUM STILE DOORS

logo

VISION DRAFTING, INC.
shop drawings engineering
TEL. (470) 406-8783
RGRAHAM@VISIONDRAFTING.NET
WWW.VISIONDRAFTING.NET

REVISION NO.	DATE	BY

PRINTS ISSUED FOR 1ST APPROVAL	DATE 06/24/2024	BY B.G.

ARCHITECT/LOCATION
name
address

PROJECT NAME/LOCATION
project name
address

JOB NO.
316

SCALE:
3/8" = 1'-0"

SHEET NO.
DR & HW
103

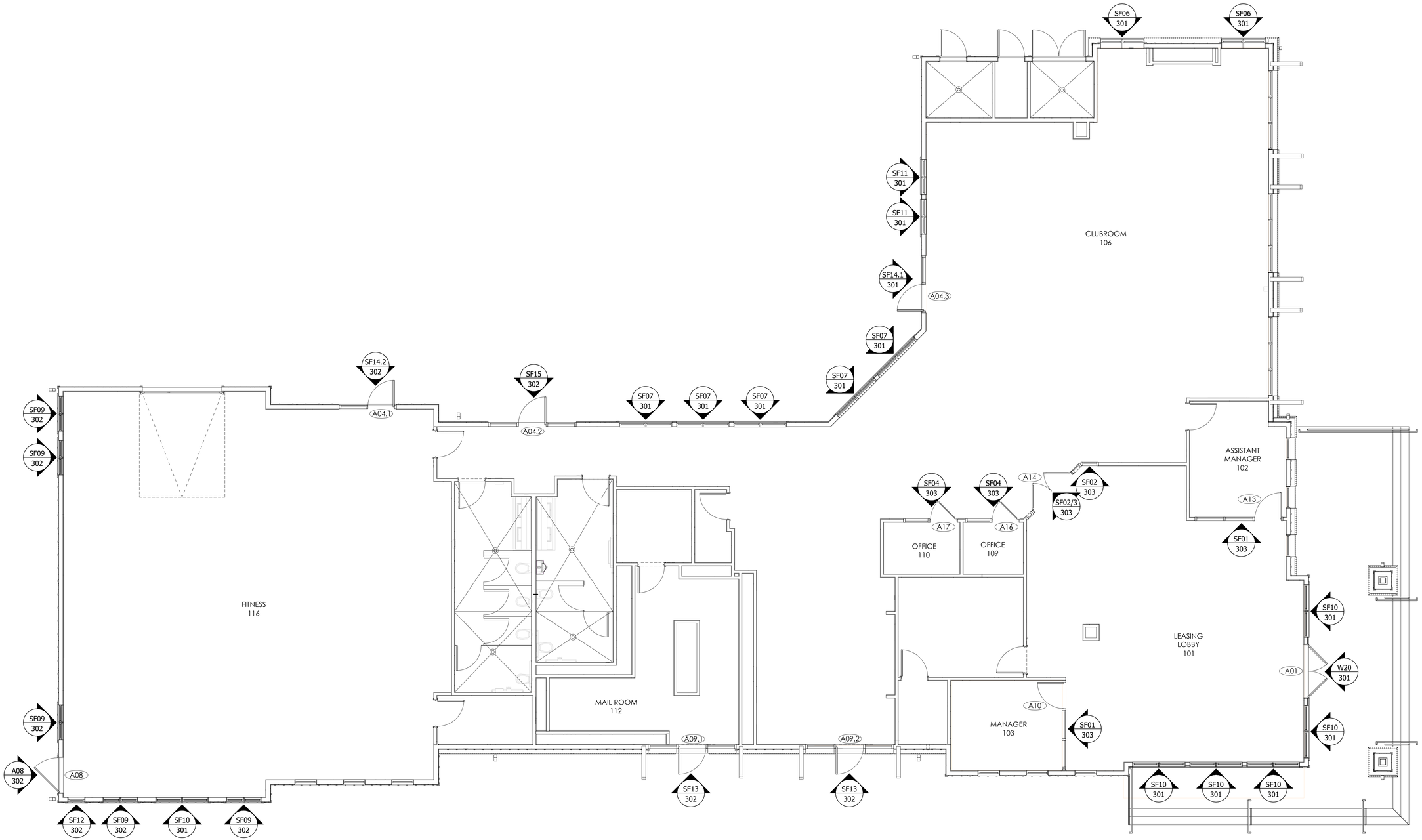

CLUBHOUSE
KEY PLAN
ARCH REF: A1-40 3/16" = 1'-0" 1

logo

VISION DRAFTING, INC.
shop drawings engineering
TEL. (470) 406-8783
RGRAHAM@VISIONDRAFTING.NET
WWW.VISIONDRAFTING.NET

BY	DATE	REVISION NO.	BY	DATE	PRINTS ISSUED FOR
			B.G.	06/24/2024	1ST APPROVAL

ARCHITECT/LOCATION
name
address

PROJECT NAME/LOCATION
project name
address

JOB NO.
316

SCALE:
3/16" = 1'-0"

SHEET NO.
KEY PLAN
201

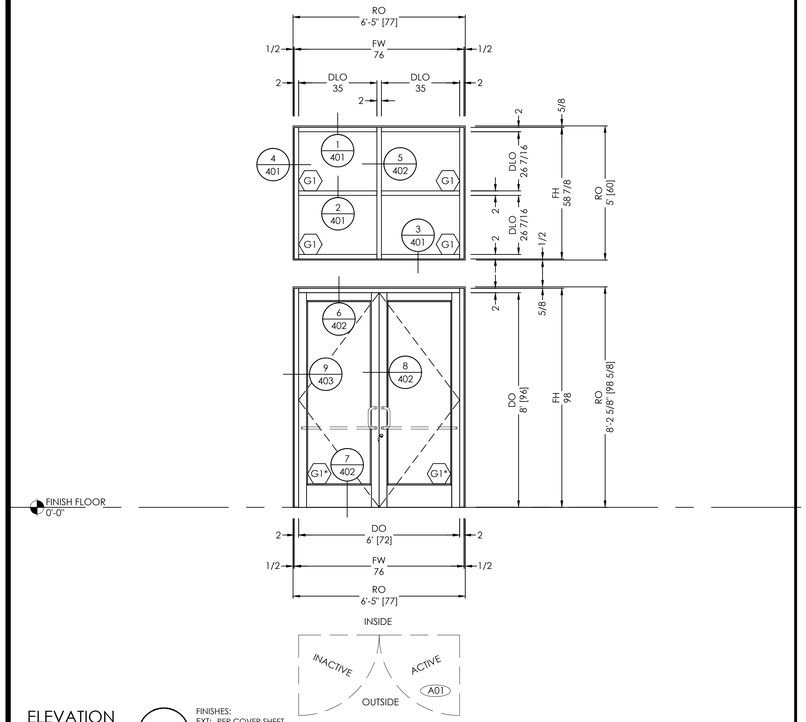

ELEVATION W20

SCALE: 3/8" = 1'-0"
QTY: 1
ARCH. REF.: A1-40

FINISHES:
EXT: PER COVER SHEET
INT: PER COVER SHEET
SYSTEM(S): FG6000 THERMAL
MS-375 MEDIUM STILE DOORS

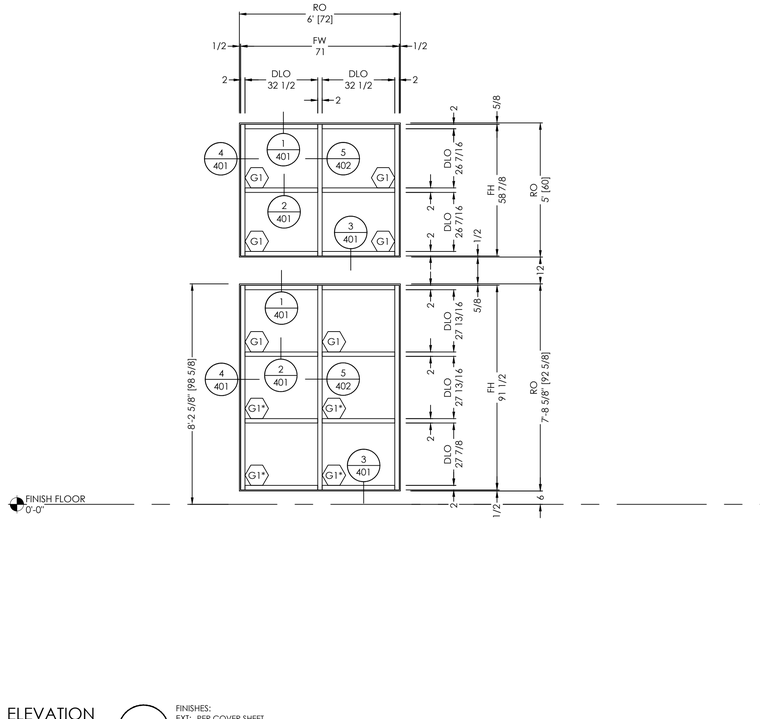

ELEVATION SF10

SCALE: 3/8" = 1'-0"
QTY: 6
ARCH. REF.: A1-40

FINISHES:
EXT: PER COVER SHEET
INT: PER COVER SHEET
SYSTEM(S): FG6000 THERMAL

TYPICAL ELEVATION NOTES:
- PLEASE VERIFY ALL DIMENSIONS PRIOR TO FABRICATION AND INSTALLATION.
- PLEASE VERIFY ALL GLAZING MARKS

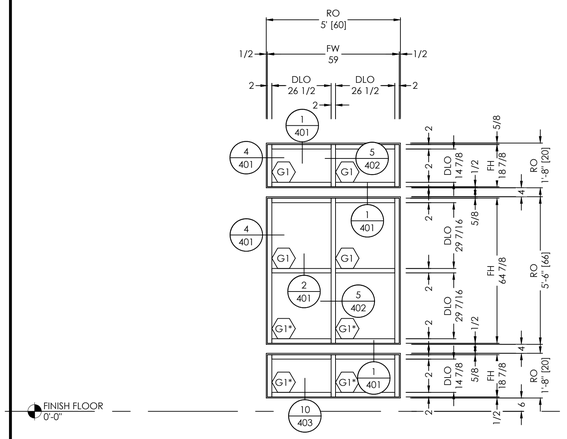

ELEVATION SF06

SCALE: 3/8" = 1'-0"
QTY: 2
ARCH. REF.: A1-40

FINISHES:
EXT: PER COVER SHEET
INT: PER COVER SHEET
SYSTEM(S): FG6000 THERMAL

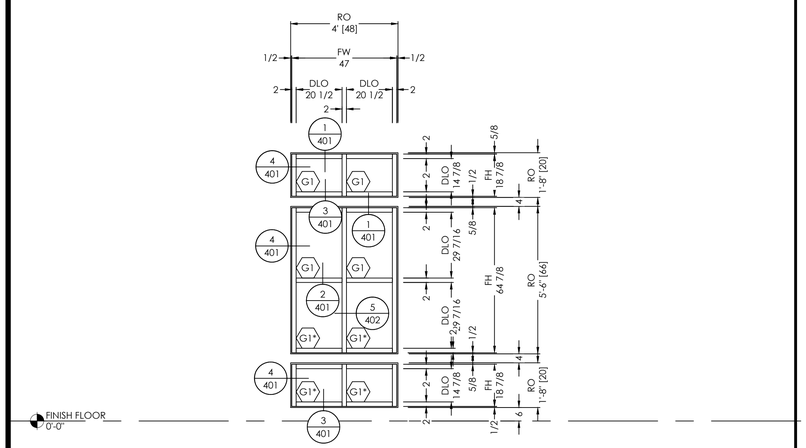

ELEVATION SF11

SCALE: 3/8" = 1'-0"
QTY: 2
ARCH. REF.: A1-40

FINISHES:
EXT: PER COVER SHEET
INT: PER COVER SHEET
SYSTEM(S): FG6000 THERMAL

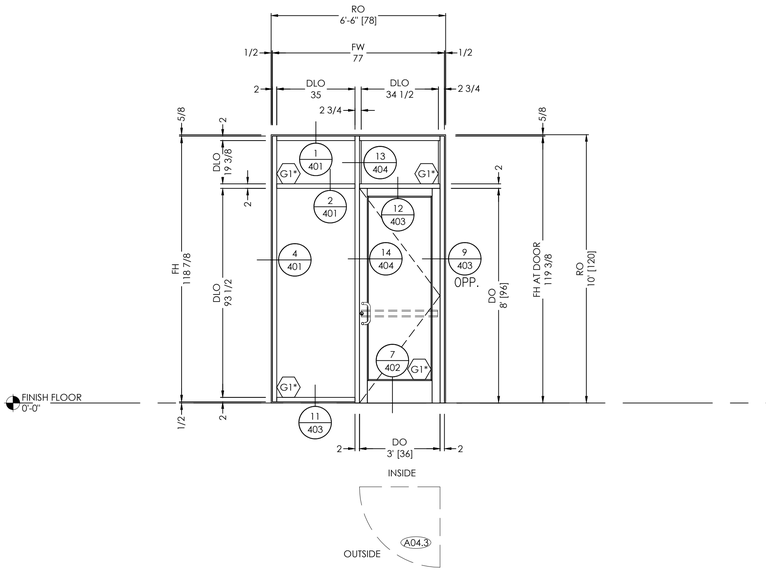

ELEVATION SF14.1

SCALE: 3/8" = 1'-0"
QTY: 1
ARCH. REF.: A1-40

FINISHES:
EXT: PER COVER SHEET
INT: PER COVER SHEET
SYSTEM(S): FG6000 THERMAL
MS-375 MEDIUM STILE DOORS

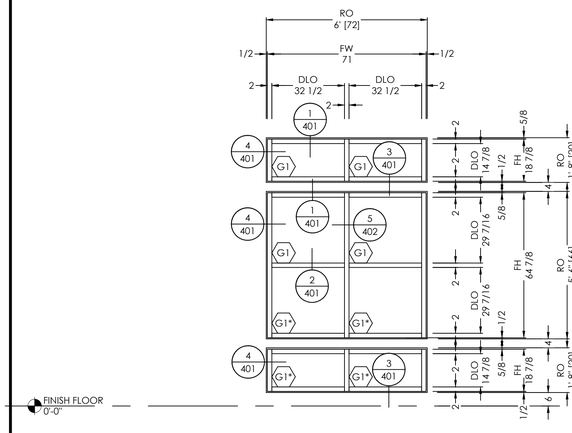

ELEVATION SF07

SCALE: 3/8" = 1'-0"
QTY: 5
ARCH. REF.: A1-40

FINISHES:
EXT: PER COVER SHEET
INT: PER COVER SHEET
SYSTEM(S): FG6000 THERMAL

logo

VISION DRAFTING, INC.
shop drawings engineering
TEL. (470) 406-8783
RGRAHAM@VISIONDRAFTING.NET
WWW.VISIONDRAFTING.NET

REVISION NO.	BY	DATE

PRINTS ISSUED FOR	DATE	BY
1ST APPROVAL	06/24/2024	B.G.

ARCHITECT/LOCATION
name
address

PROJECT NAME/LOCATION
project name
address

JOB NO. 316

SCALE: 3/8" = 1'-0"

SHEET NO.
ELEVATIONS
301

TYPICAL ELEVATION NOTES:
- PLEASE VERIFY ALL DIMENSIONS PRIOR TO FABRICATION AND INSTALLATION.
- PLEASE VERIFY ALL GLAZING MARKS

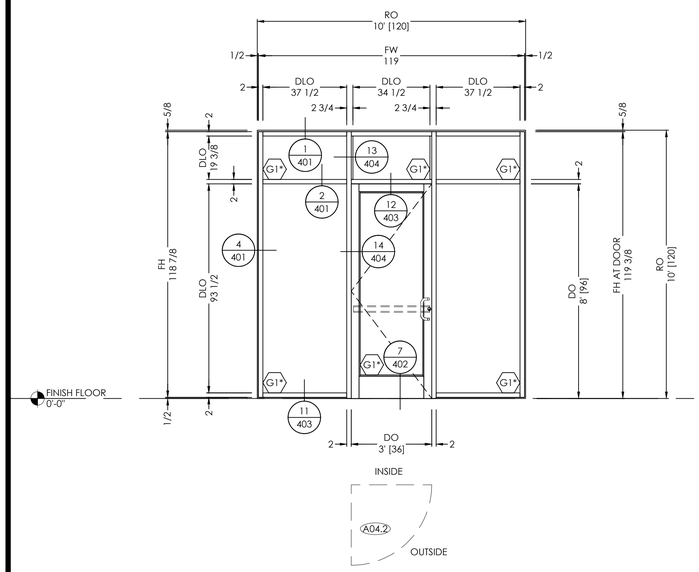

ELEVATION SF15
SCALE: 3/8" = 1'-0"
QTY: 1
ARCH. REF.: A1-40
FINISHES:
EXT: PER COVER SHEET
INT: PER COVER SHEET
SYSTEM(S): FG6000 THERMAL
MS-375 MEDIUM STILE DOORS

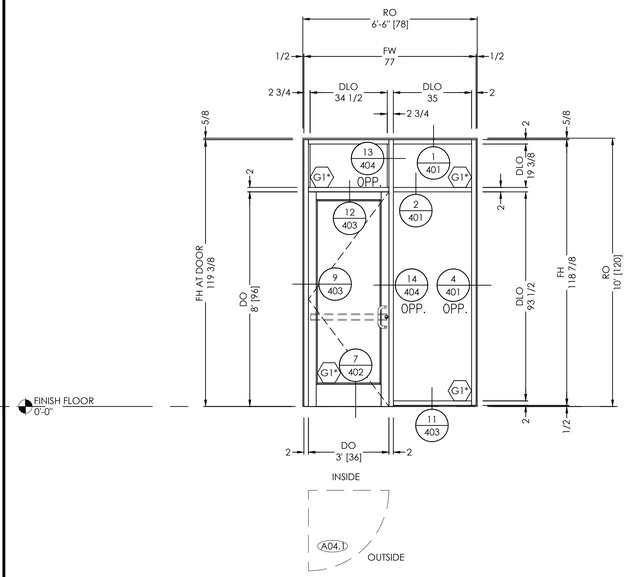

ELEVATION SF14.2
SCALE: 3/8" = 1'-0"
QTY: 1
ARCH. REF.: A1-40
FINISHES:
EXT: PER COVER SHEET
INT: PER COVER SHEET
SYSTEM(S): FG6000 THERMAL
MS-375 MEDIUM STILE DOORS

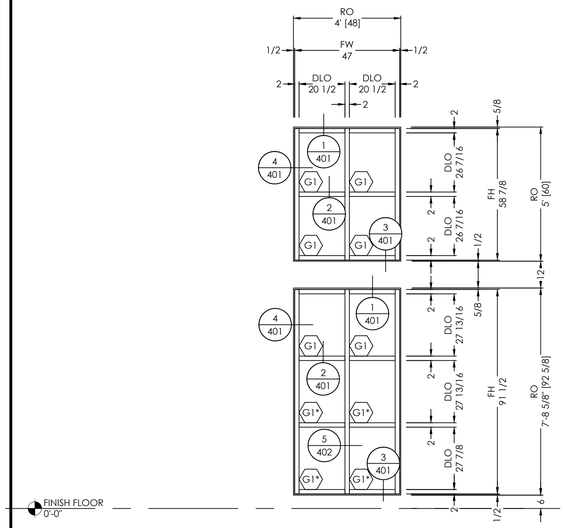

ELEVATION SF09
SCALE: 3/8" = 1'-0"
QTY: 5
ARCH. REF.: A1-40
FINISHES:
EXT: PER COVER SHEET
INT: PER COVER SHEET
SYSTEM(S): FG6000 THERMAL

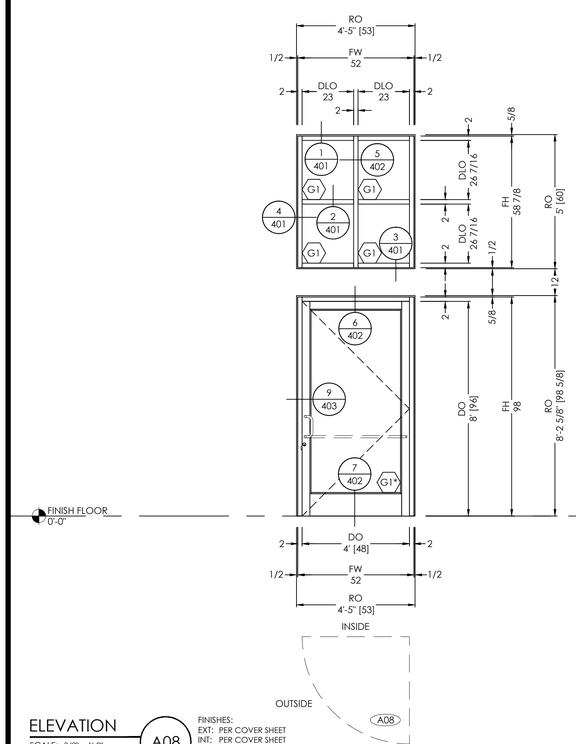

ELEVATION A08
SCALE: 3/8" = 1'-0"
QTY: 1
ARCH. REF.: A1-40
FINISHES:
EXT: PER COVER SHEET
INT: PER COVER SHEET
SYSTEM(S): FG6000 THERMAL
MS-375 MEDIUM STILE DOORS

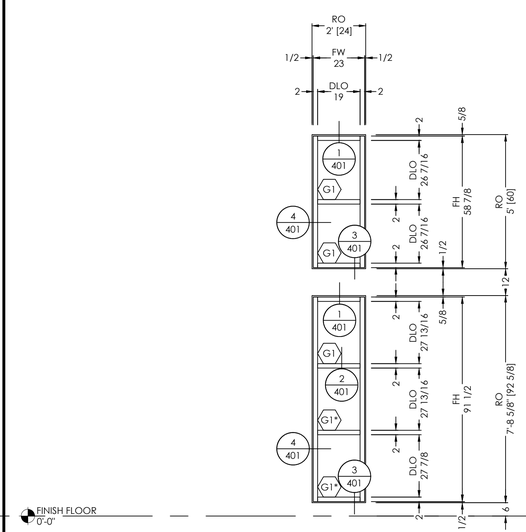

ELEVATION SF12
SCALE: 3/8" = 1'-0"
QTY: 2
ARCH. REF.: A1-40
FINISHES:
EXT: PER COVER SHEET
INT: PER COVER SHEET
SYSTEM(S): FG6000 THERMAL

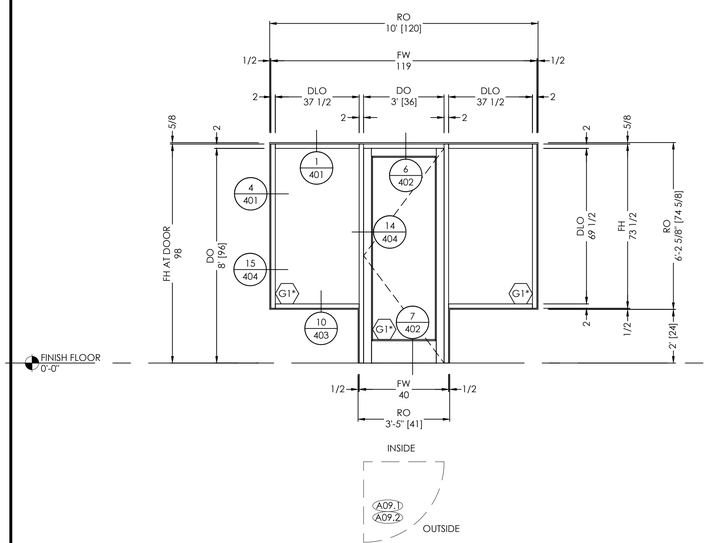

ELEVATION SF13
SCALE: 3/8" = 1'-0"
QTY: 2
ARCH. REF.: A1-40
FINISHES:
EXT: PER COVER SHEET
INT: PER COVER SHEET
SYSTEM(S): FG6000 THERMAL
MS-375 MEDIUM STILE DOORS

logo

VISION DRAFTING, INC.
shop drawings engineering
TEL. (470) 406-8783
RGRAHAM@VISIONDRAFTING.NET
WWW.VISIONDRAFTING.NET

REVISION NO.	DATE	BY

PRINTS ISSUED FOR	DATE	BY
1ST APPROVAL	06/24/2024	B.G.

ARCHITECT/LOCATION
name
address

PROJECT NAME/LOCATION
project name
address

JOB NO. 316

SCALE: 3/8" = 1'-0"

SHEET NO.
ELEVATIONS
302

TYPICAL ELEVATION NOTES:
- PLEASE VERIFY ALL DIMENSIONS PRIOR TO FABRICATION AND INSTALLATION.
- PLEASE VERIFY ALL GLAZING MARKS

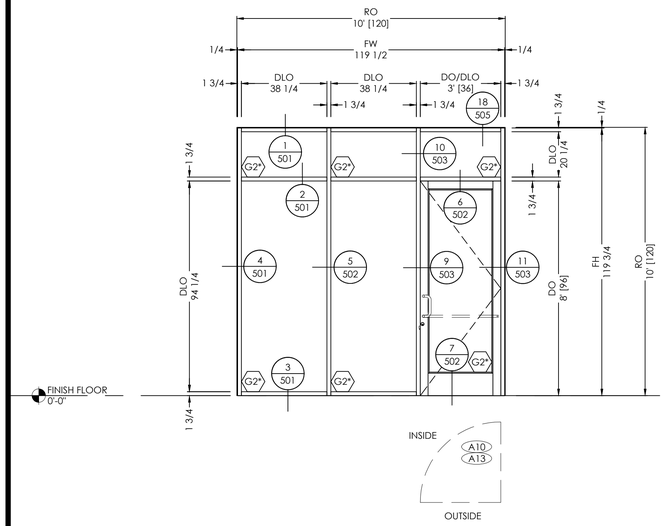

ELEVATION
SCALE: 3/8" = 1'-0"
QTY: 1
SF01
FINISHES:
EXT: PER COVER SHEET
INT: PER COVER SHEET
SYSTEM(S): FG2000
MS-375 MEDIUM STILE DOORS
ARCH. REF.: A1-40

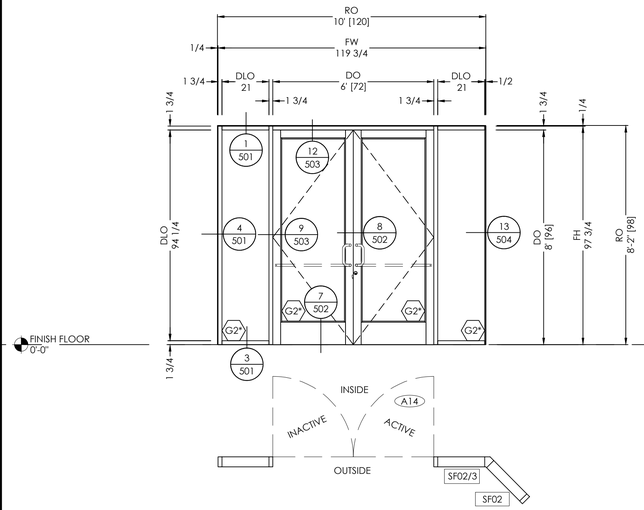

ELEVATION
SCALE: 3/8" = 1'-0"
QTY: 1
SF02/3
FINISHES:
EXT: PER COVER SHEET
INT: PER COVER SHEET
SYSTEM(S): FG2000
MS-375 MEDIUM STILE DOORS
ARCH. REF.: A1-40

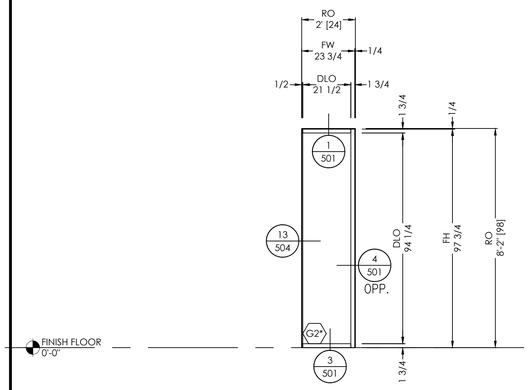

ELEVATION
SCALE: 3/8" = 1'-0"
QTY: 1
SF02
FINISHES:
EXT: PER COVER SHEET
INT: PER COVER SHEET
SYSTEM(S): FG2000
ARCH. REF.: A1-40

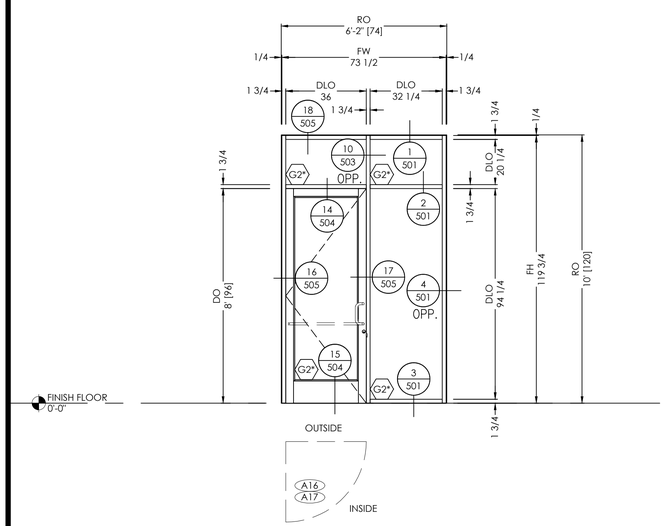

ELEVATION
SCALE: 3/8" = 1'-0"
QTY: 2
SF04
FINISHES:
EXT: PER COVER SHEET
INT: PER COVER SHEET
SYSTEM(S): FG2000
MS-375 MEDIUM STILE DOORS
ARCH. REF.: A1-40

logo

VISION DRAFTING, INC.
shop drawings engineering
TEL. (470) 406-8783
RGRAHAM@VISIONDRAFTING.NET
WWW.VISIONDRAFTING.NET

BY	DATE	REVISION NO.	BY	DATE	PRINTS ISSUED FOR
			B.G.	06/24/2024	1ST APPROVAL

ARCHITECT/LOCATION
name
address

PROJECT NAME/LOCATION
project name
address

JOB NO.
316

SCALE:
3/8" = 1'-0"

SHEET NO.
ELEVATIONS
303

HEADER DETAIL 1

SCALE= FULL

ARCH. REF.: 7/A8-21

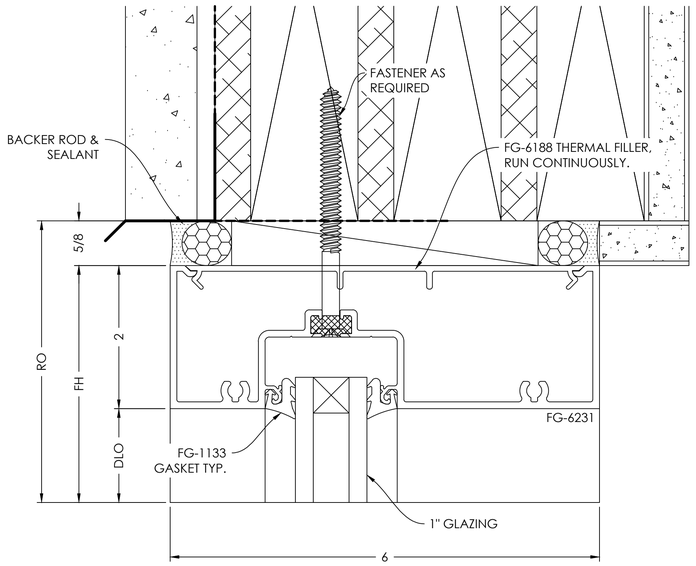

HORIZONTAL DETAIL 2

SCALE= FULL

ARCH. REF.: NONE

TYPICAL DETAIL NOTES:
- ADEQUATE SUPPORT MUST BE PROVIDED TO WITHSTAND LOADS IMPOSED BY WINDOW SYSTEM
- REFER TO INSTALLATION MANUAL FOR ADD'L INFO
- CAP-SEAL ALL FASTENERS IN GLAZING POCKETS

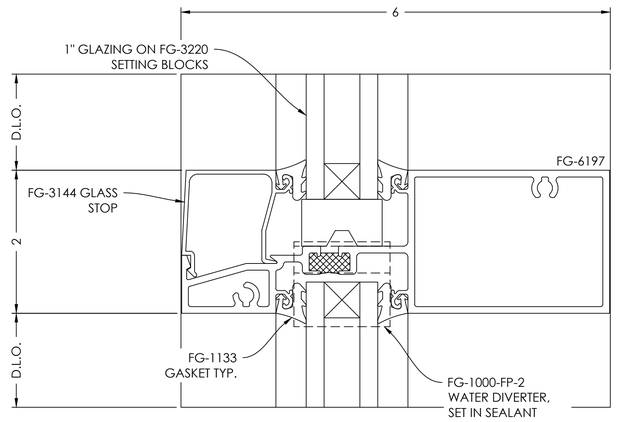

SILL DETAIL 3

SCALE= FULL

ARCH. REF.: A8-22

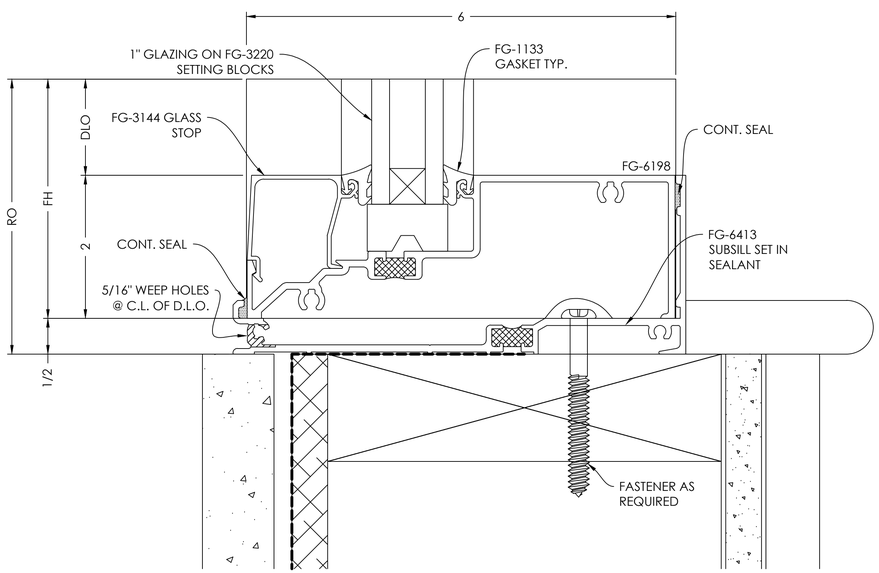

JAMB DETAIL 4

SCALE= FULL

ARCH. REF.: A8-22

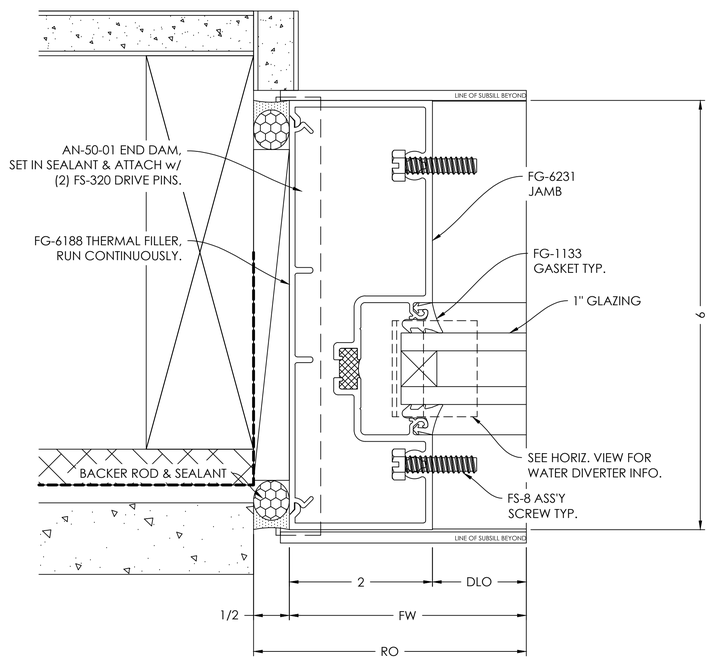

logo

VISION DRAFTING, INC.
shop drawings engineering
TEL. (470) 406-8783
RGRAHAM@VISIONDRAFTING.NET
WWW.VISIONDRAFTING.NET

PRINTS ISSUED FOR	DATE	REVISION NO.	BY
1ST APPROVAL	06/24/2024	B.G.	

ARCHITECT/LOCATION
name
address

PROJECT NAME/LOCATION
project name
address

JOB NO. 316

SCALE: 1:1

SHEET NO. DETAILS 401

INTERMEDIATE VERTICAL DETAIL 5

SCALE= FULL

ARCH. REF.: NONE

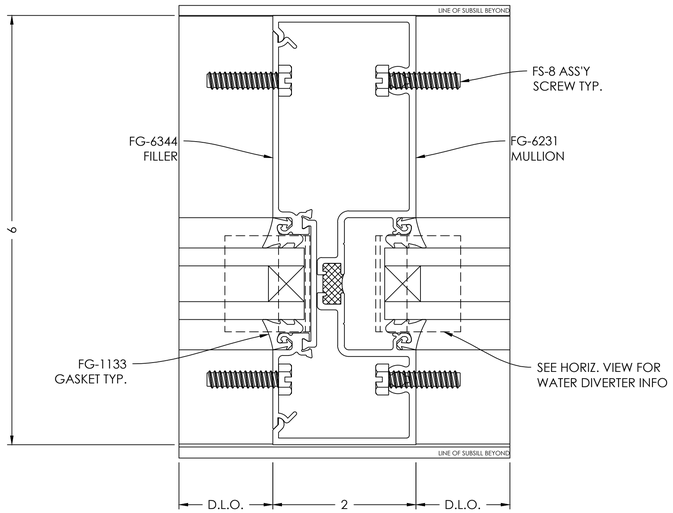

DOOR HEADER DETAIL 6

SCALE= FULL

ARCH. REF.: 7/A8-21

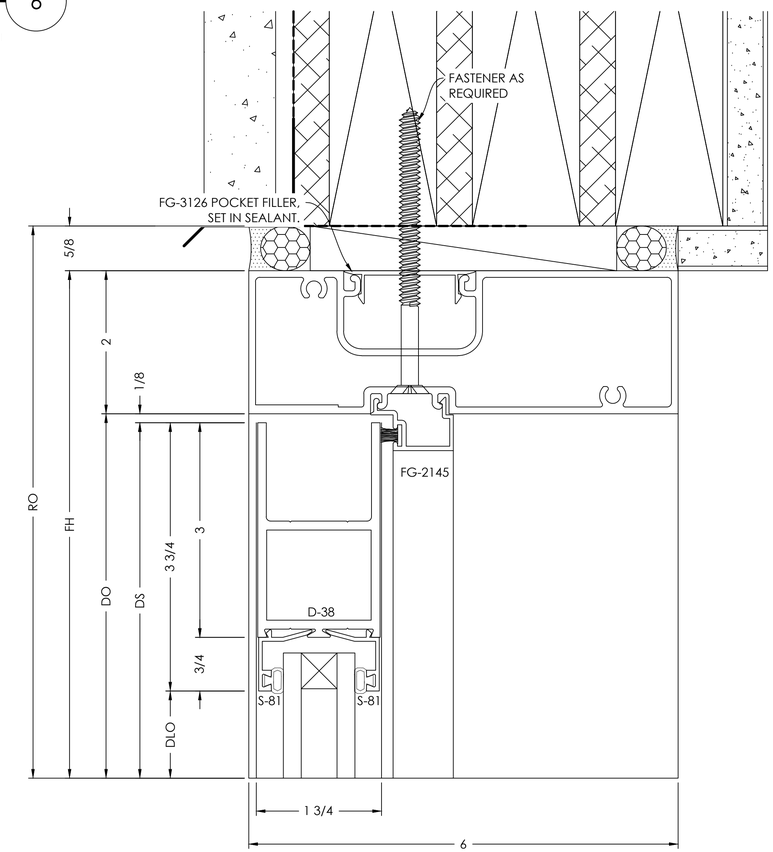

MEETING STILES DETAIL 8

SCALE= FULL

ARCH. REF.: NONE

TYPICAL DETAIL NOTES:

- ADEQUATE SUPPORT MUST BE PROVIDED TO WITHSTAND LOADS IMPOSED BY WINDOW SYSTEM
- REFER TO INSTALLATION MANUAL FOR ADD'L INFO
- CAP-SEAL ALL FASTENERS IN GLAZING POCKETS

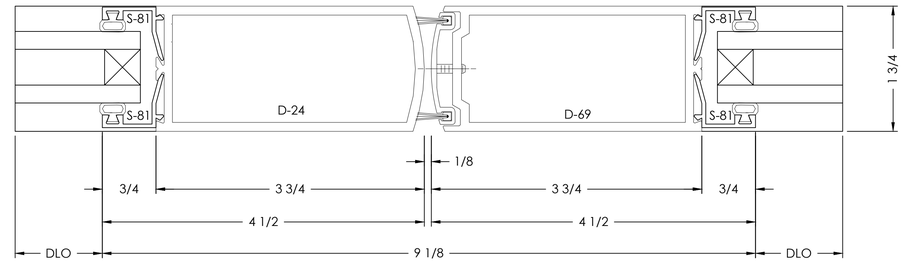

BOTTOM RAIL DETAIL 7

SCALE= FULL

ARCH. REF.: A5-19

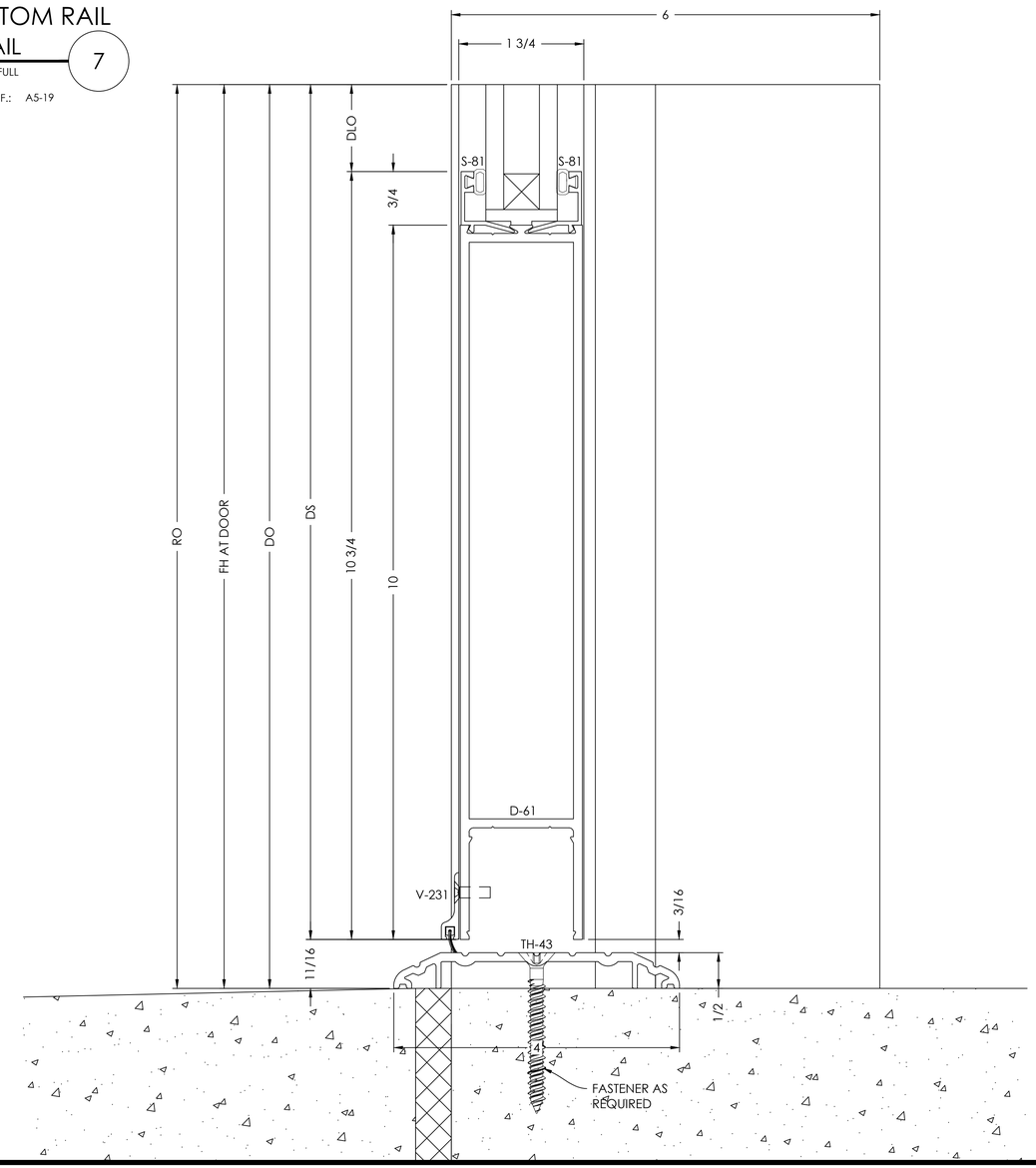

logo

VISION DRAFTING, INC.
shop drawings engineering
TEL. (470) 406-8783
RGRAHAM@VISIONDRAFTING.NET
WWW.VISIONDRAFTING.NET

BY	DATE	REVISION NO.	BY	DATE	PRINTS ISSUED FOR
			B.G.	06/24/2024	1ST APPROVAL

ARCHITECT/LOCATION
name
address

PROJECT NAME/LOCATION
project name
address

JOB NO. 316

SCALE: 1:1

SHEET NO. DETAILS 402

DOOR JAMB DETAIL 9

SCALE= FULL

ARCH. REF.: A8-22

TYPICAL DETAIL NOTES:
- ADEQUATE SUPPORT MUST BE PROVIDED TO WITHSTAND LOADS IMPOSED BY WINDOW SYSTEM
- REFER TO INSTALLATION MANUAL FOR ADD'L INFO
- CAP-SEAL ALL FASTENERS IN GLAZING POCKETS

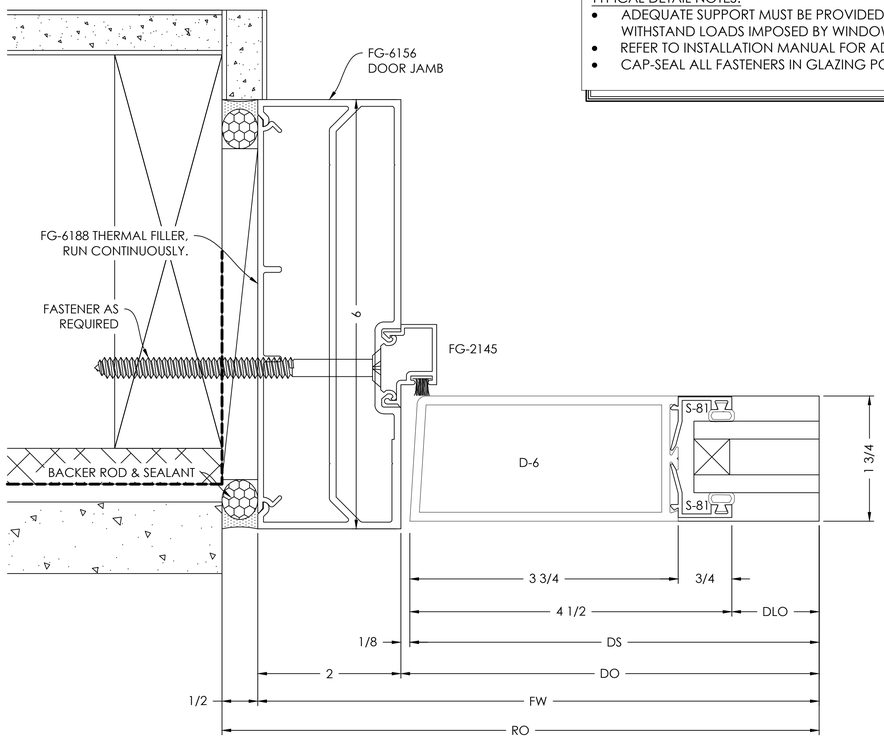

DOOR HEADER DETAIL 12

SCALE= FULL

ARCH. REF.: NONE

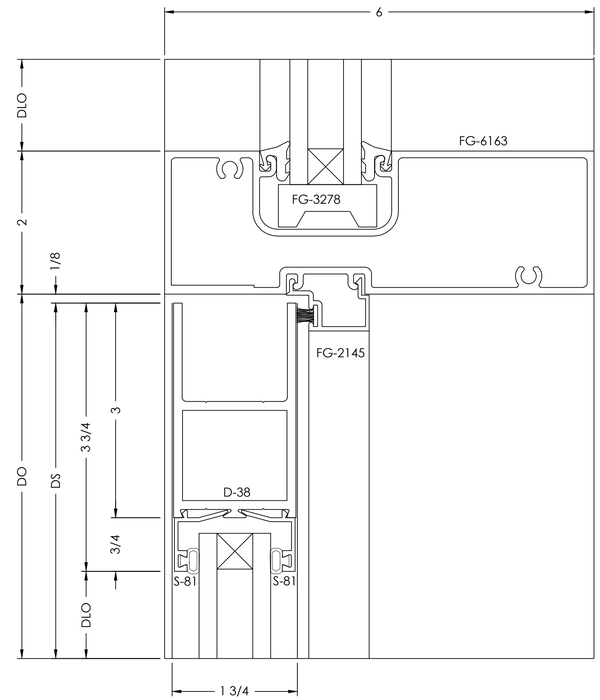

SILL DETAIL 10

SCALE= FULL

ARCH. REF.: A8-21

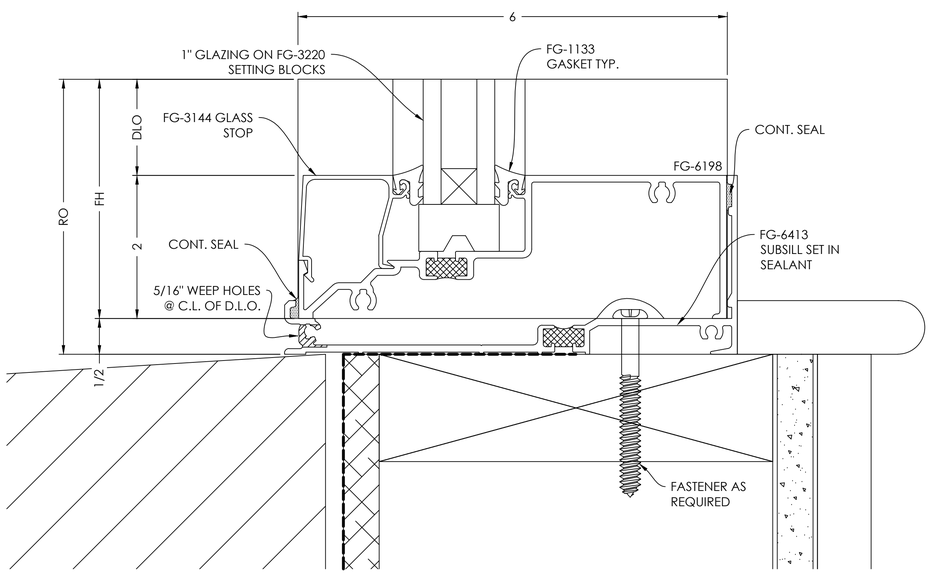

SILL DETAIL 11

SCALE= FULL

ARCH. REF.: A5-19

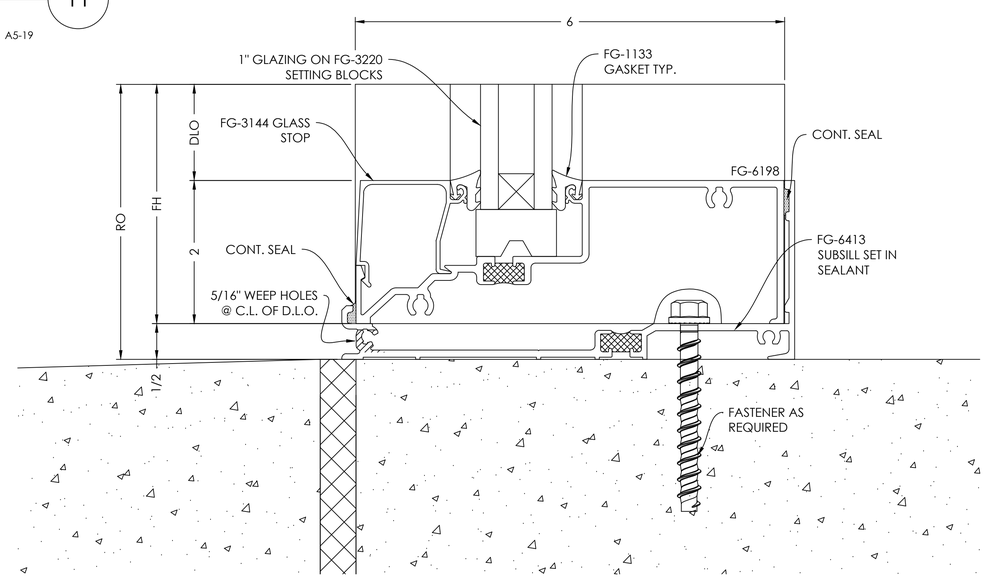

logo

VISION DRAFTING, INC.
shop drawings + engineering
TEL. (470) 406-8783
RGRAHAM@VISIONDRAFTING.NET
WWW.VISIONDRAFTING.NET

PRINTS ISSUED FOR	DATE	REVISION NO.	BY
1ST APPROVAL	06/24/2024	B.G.	

ARCHITECT/LOCATION: name, address

PROJECT NAME/LOCATION: project name, address

JOB NO. 316

SCALE: 1:1

SHEET NO. DETAILS 403

DOOR JAMB AT TRANSOM AREA
DETAIL 13

SCALE= FULL

ARCH. REF.: NONE

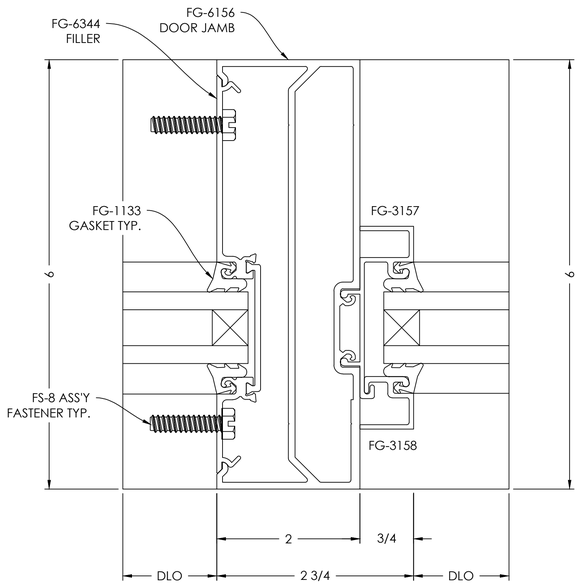

DOOR JAMB
DETAIL 14

SCALE= FULL

ARCH. REF.: NONE

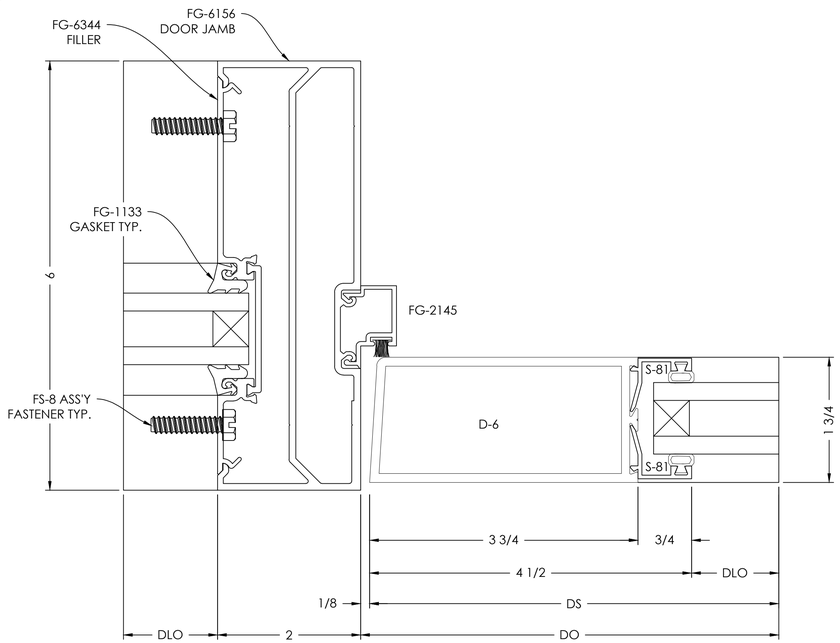

JAMB
DETAIL 15

SCALE= FULL

ARCH. REF.: A8-21

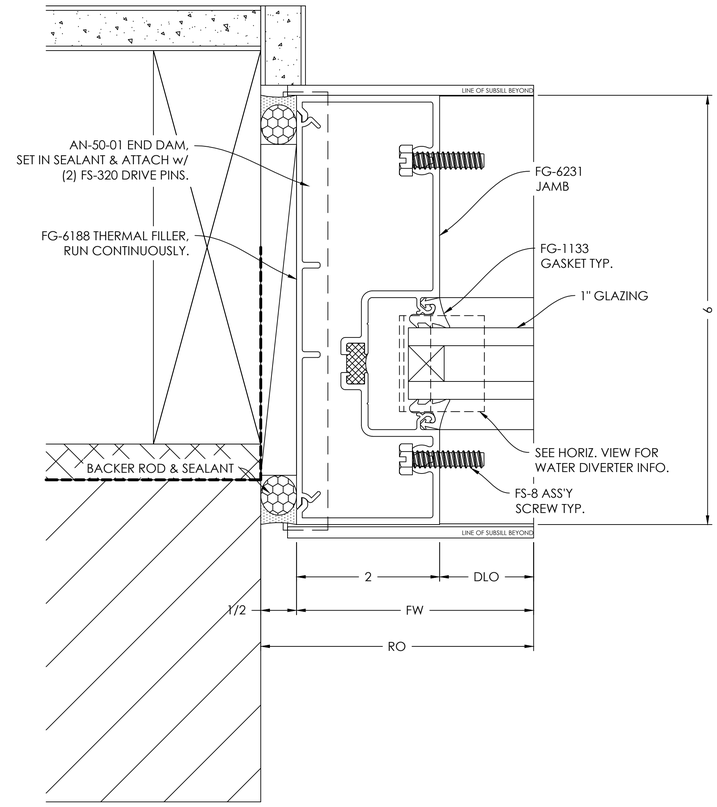

logo

VISION DRAFTING, INC.
shop drawings engineering
TEL. (470) 406-8783
RGRAHAM@VISIONDRAFTING.NET
WWW.VISIONDRAFTING.NET

REVISION NO.	DATE	BY

PRINTS ISSUED FOR	DATE	BY
1ST APPROVAL	06/24/2024	B.G.

ARCHITECT/LOCATION
name
address

PROJECT NAME/LOCATION
project name
address

JOB NO. 316

SCALE: 1:1

SHEET NO.
DETAILS
404

HEADER DETAIL 1

SCALE= FULL

ARCH. REF.: NONE

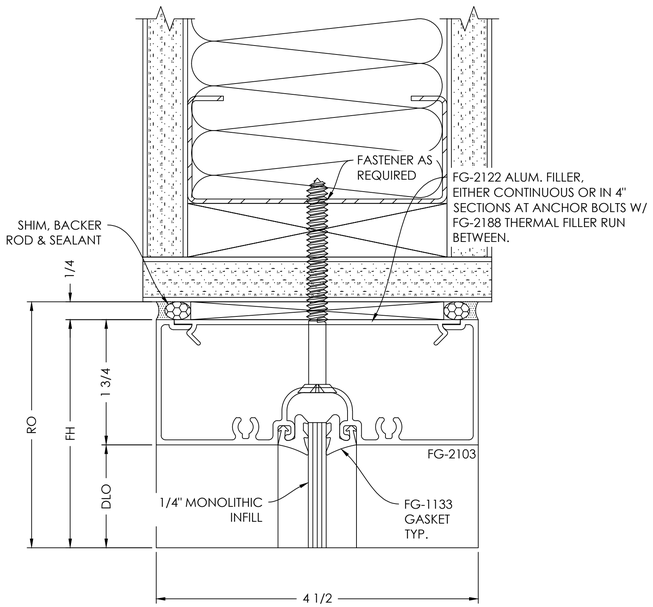

HORIZONTAL DETAIL 2

SCALE= FULL

ARCH. REF.: NONE

TYPICAL DETAIL NOTES:

- ADEQUATE SUPPORT MUST BE PROVIDED TO WITHSTAND LOADS IMPOSED BY WINDOW SYSTEM
- REFER TO INSTALLATION MANUAL FOR ADD'L INFO

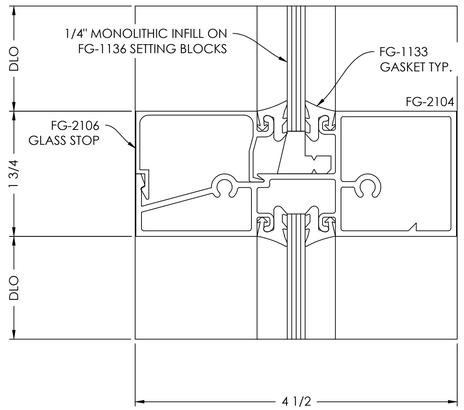

SILL DETAIL 3

SCALE= FULL

ARCH. REF.: NONE

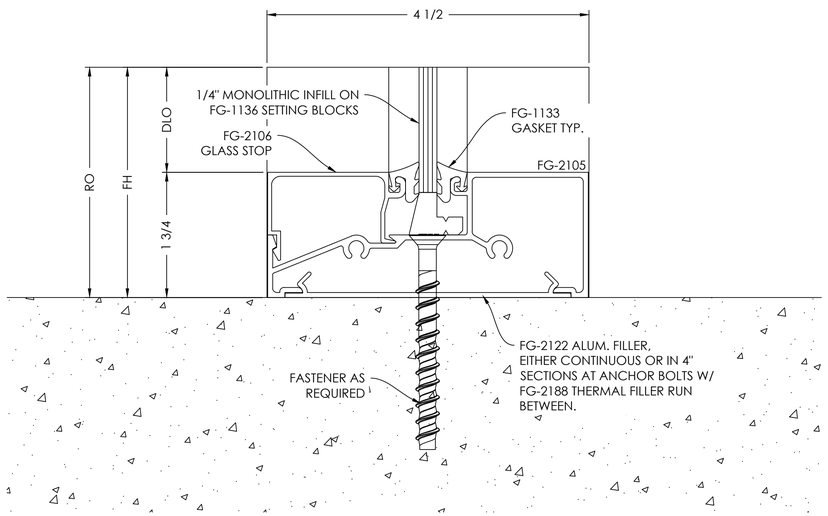

JAMB DETAIL 4

SCALE= FULL

ARCH. REF.: NONE

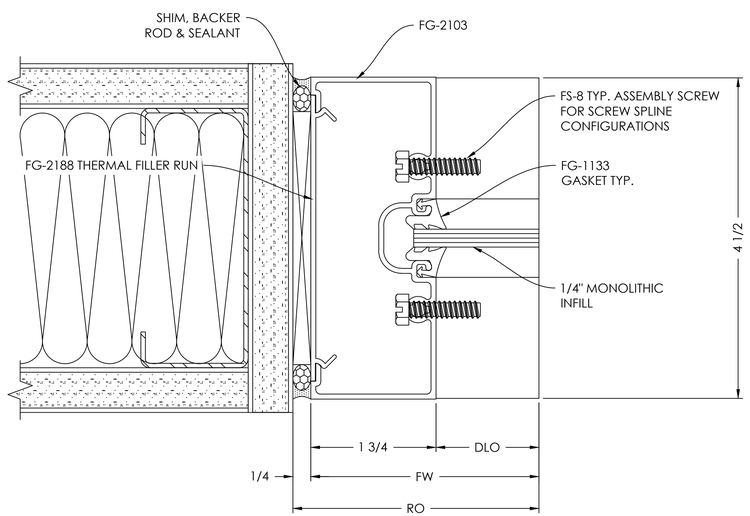

logo

VISION DRAFTING, INC.
shop drawings + engineering
TEL. (470) 406-8783
RGRAHAM@VISIONDRAFTING.NET
WWW.VISIONDRAFTING.NET

PRINTS ISSUED FOR	DATE	BY	REVISION NO.	DATE	BY
1ST APPROVAL	06/24/2024	B.G.			

ARCHITECT/LOCATION
name
address

PROJECT NAME/LOCATION
project name
address

JOB NO. 316

SCALE: 1:1

SHEET NO.
DETAILS
501

INTERMEDIATE VERTICAL DETAIL 5

SCALE= FULL

ARCH. REF.: NONE

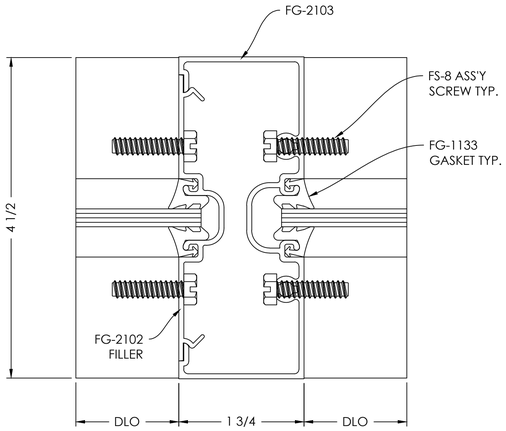

DOOR HEADER DETAIL 6

SCALE= FULL

ARCH. REF.: NONE

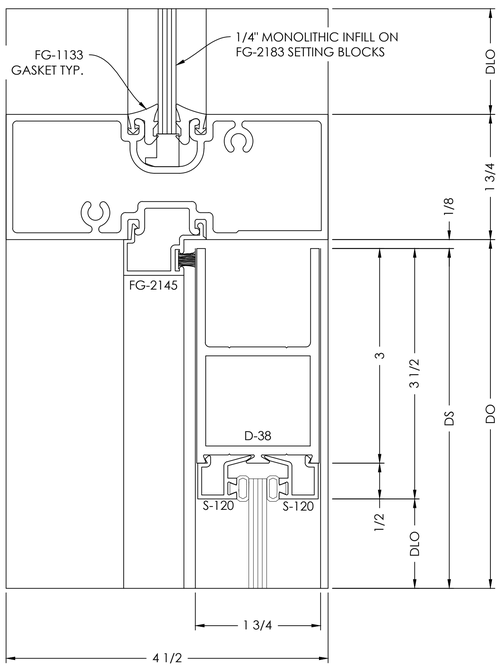

MEETING STILES DETAIL 8

SCALE= FULL

ARCH. REF.: NONE

TYPICAL DETAIL NOTES:
- ADEQUATE SUPPORT MUST BE PROVIDED TO WITHSTAND LOADS IMPOSED BY WINDOW SYSTEM
- REFER TO INSTALLATION MANUAL FOR ADD'L INFO

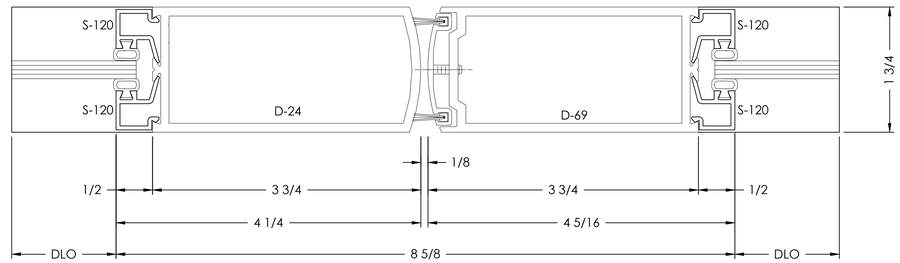

BOTTOM RAIL DETAIL 7

SCALE= FULL

ARCH. REF.: NONE

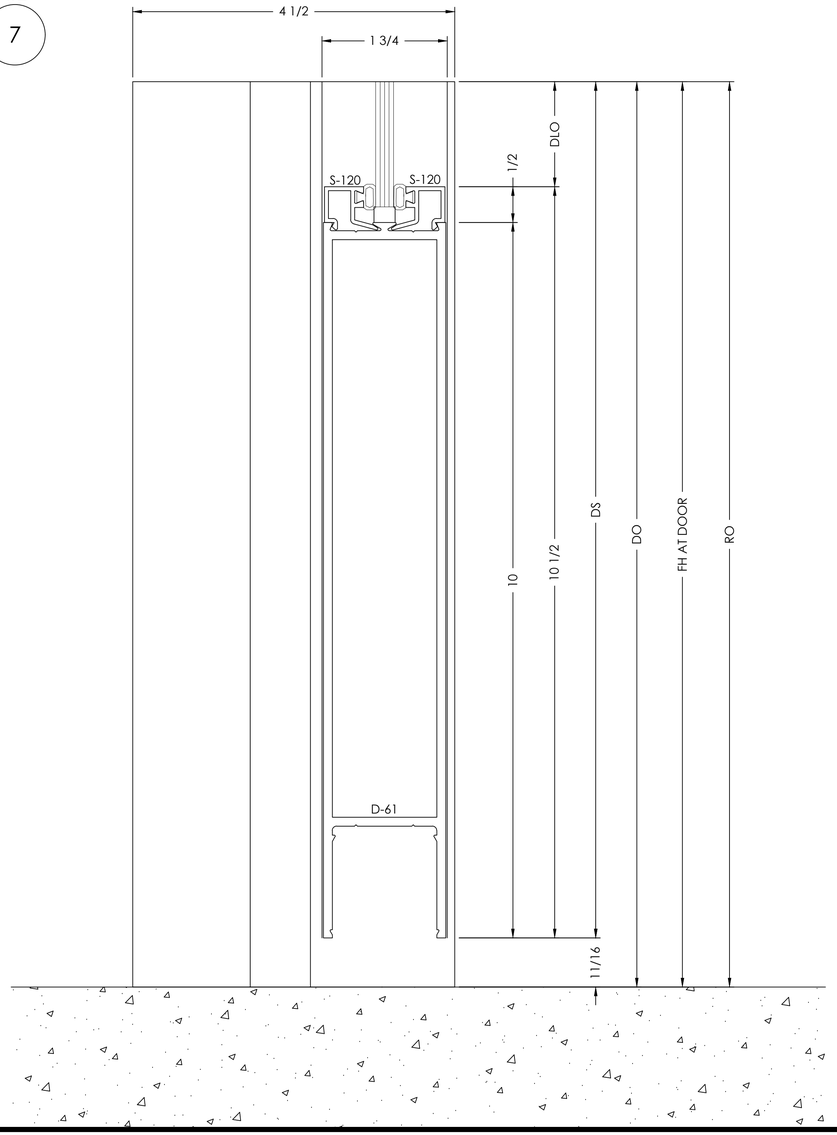

logo

VISION DRAFTING, INC.
shop drawings engineering
TEL. (470) 406-8783
RGRAHAM@VISIONDRAFTING.NET
WWW.VISIONDRAFTING.NET

DATE	BY	REVISION NO.	DATE	BY
			06/24/2024	B.G.

PRINTS ISSUED FOR 1ST APPROVAL

ARCHITECT/LOCATION
name
address

PROJECT NAME/LOCATION
project name
address

JOB NO. 316

SCALE: 1:1

SHEET NO. DETAILS 502

DOOR JAMB DETAIL 9

SCALE= FULL

ARCH. REF.: NONE

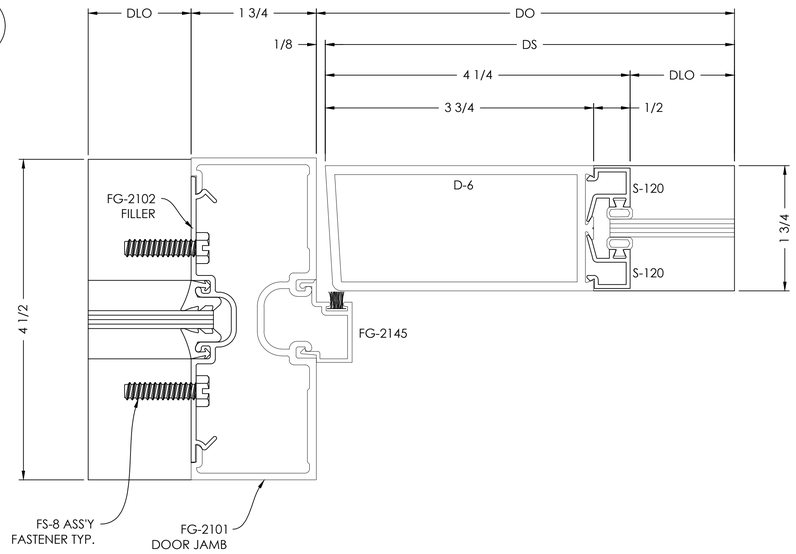

DOOR HEADER DETAIL 12

SCALE= FULL

ARCH. REF.: NONE

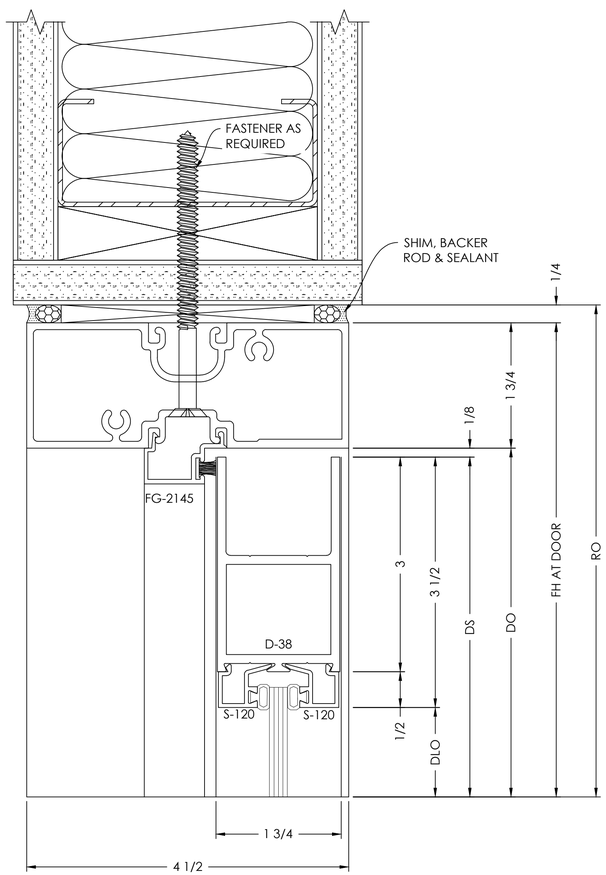

DOOR JAMB DETAIL 11

SCALE= FULL

ARCH. REF.: NONE

TYPICAL DETAIL NOTES:

- ADEQUATE SUPPORT MUST BE PROVIDED TO WITHSTAND LOADS IMPOSED BY WINDOW SYSTEM
- REFER TO INSTALLATION MANUAL FOR ADD'L INFO

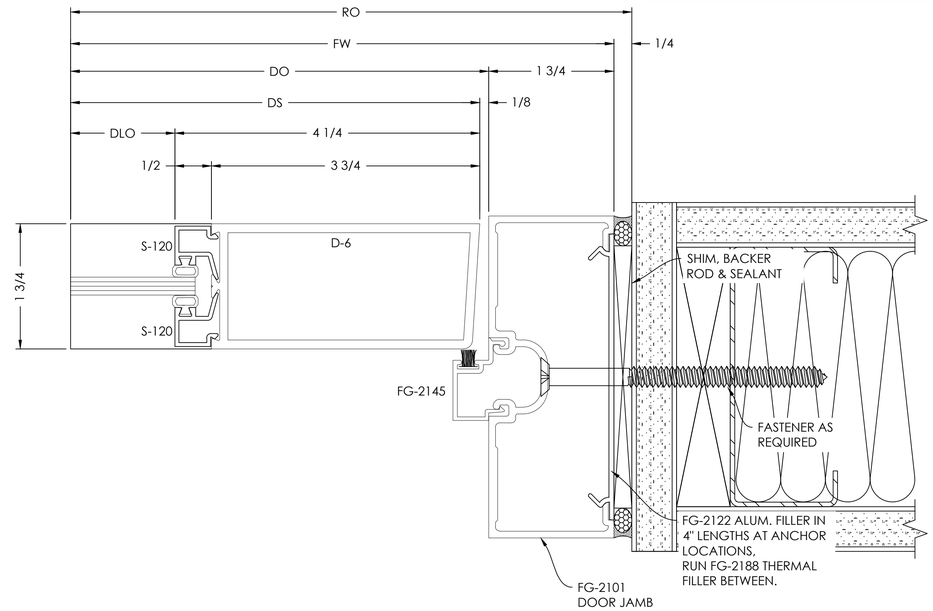

DOOR JAMB AT TRANSOM AREA DETAIL 10

SCALE= FULL

ARCH. REF.: NONE

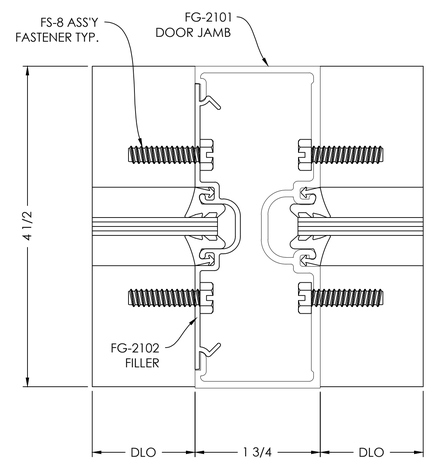

logo

VISION DRAFTING, INC.
shop drawings engineering
TEL. (470) 406-8783
RGRAHAM@VISIONDRAFTING.NET
WWW.VISIONDRAFTING.NET

PRINTS ISSUED FOR	DATE	REVISION NO.	BY	DATE	BY
1ST APPROVAL				06/24/2024	B.G.

ARCHITECT/LOCATION
name
address

PROJECT NAME/LOCATION
project name
address

JOB NO. 316

SCALE: 1:1

SHEET NO. DETAILS 503

135° CORNER MULLION DETAIL 13

SCALE= FULL

ARCH. REF.: NONE

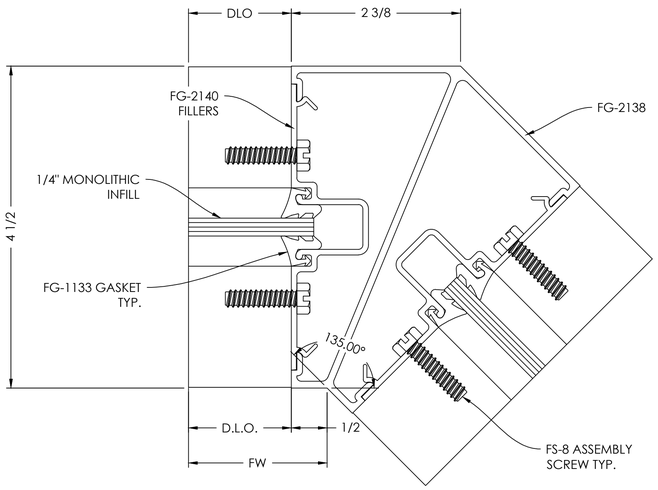

DOOR HEADER DETAIL 14

SCALE= FULL

ARCH. REF.: NONE

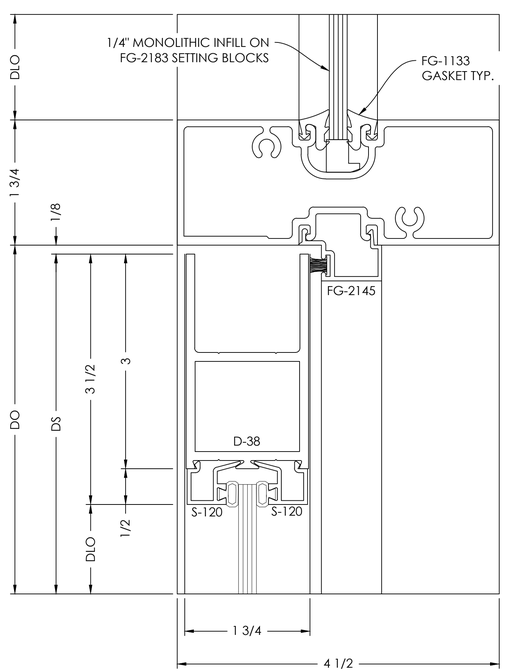

BOTTOM RAIL DETAIL 15

SCALE= FULL

ARCH. REF.: NONE

TYPICAL DETAIL NOTES:

- ADEQUATE SUPPORT MUST BE PROVIDED TO WITHSTAND LOADS IMPOSED BY WINDOW SYSTEM
- REFER TO INSTALLATION MANUAL FOR ADD'L INFO

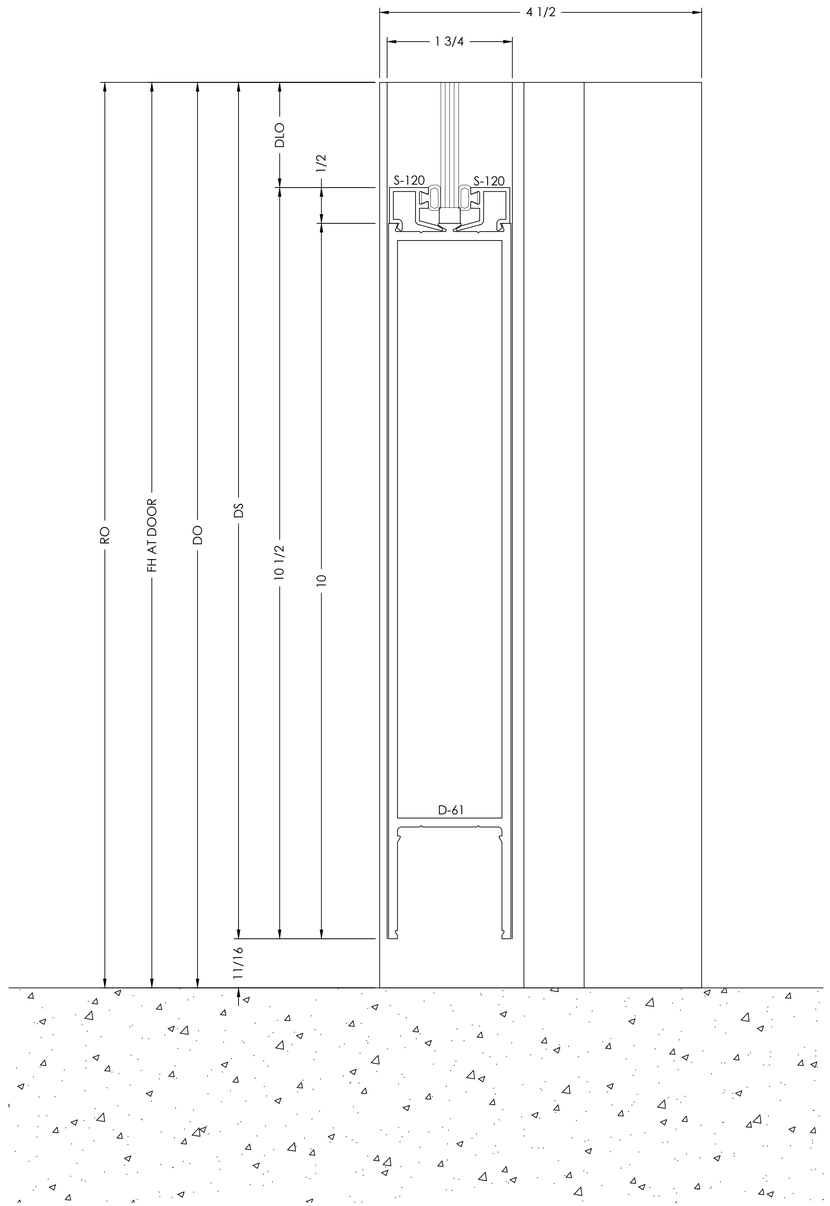

logo

VISION DRAFTING, INC.
shop drawings engineering
TEL. (470) 406-8783
RGRAHAM@VISIONDRAFTING.NET
WWW.VISIONDRAFTING.NET

PRINTS ISSUED FOR	DATE	REVISION NO.	BY
1ST APPROVAL			
	06/24/2024	B.G.	

ARCHITECT/LOCATION

name
address

PROJECT NAME/LOCATION

project name
address

JOB NO. 316

SCALE: 1:1

SHEET NO. DETAILS 504

DOOR JAMB DETAIL 16

SCALE= FULL

ARCH. REF.: NONE

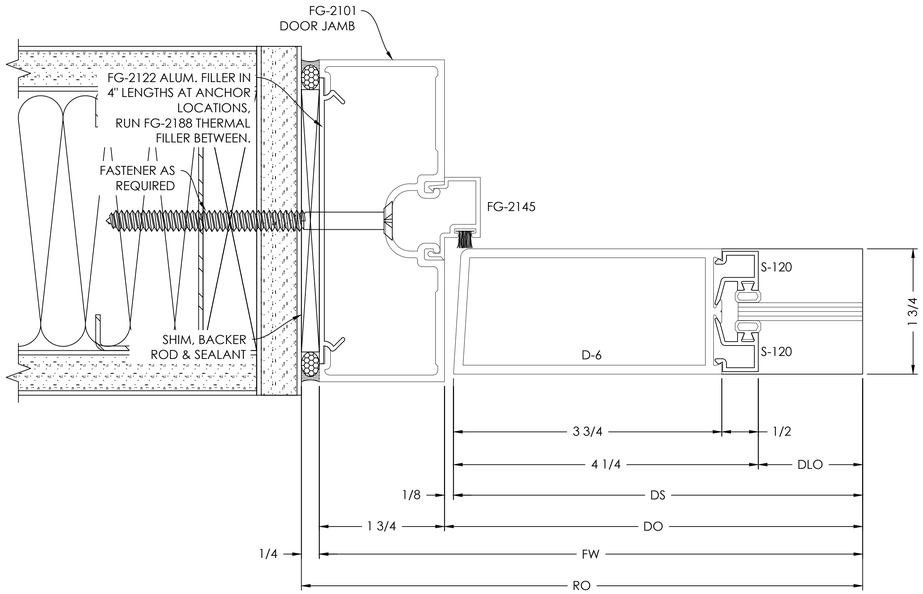

TYPICAL DETAIL NOTES:

- ADEQUATE SUPPORT MUST BE PROVIDED TO WITHSTAND LOADS IMPOSED BY WINDOW SYSTEM
- REFER TO INSTALLATION MANUAL FOR ADD'L INFO

DOOR JAMB DETAIL 17

SCALE= FULL

ARCH. REF.: NONE

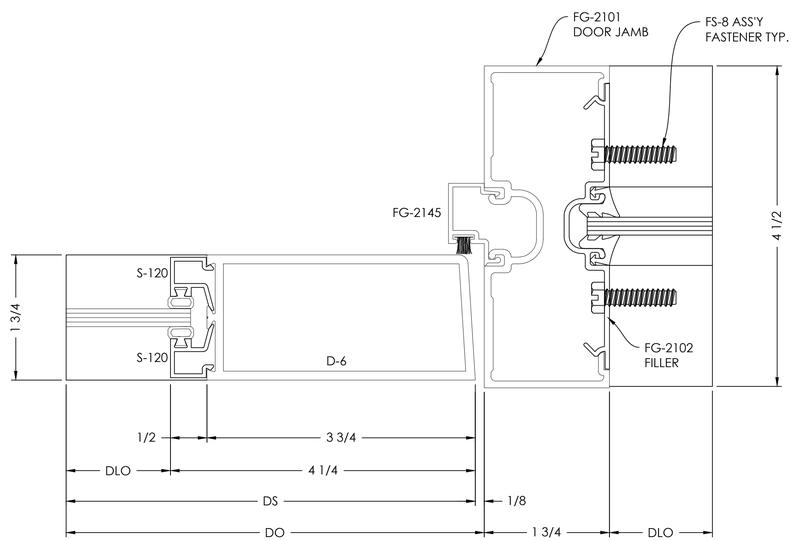

TRANSOM HEADER DETAIL 18

SCALE= FULL

ARCH. REF.: NONE

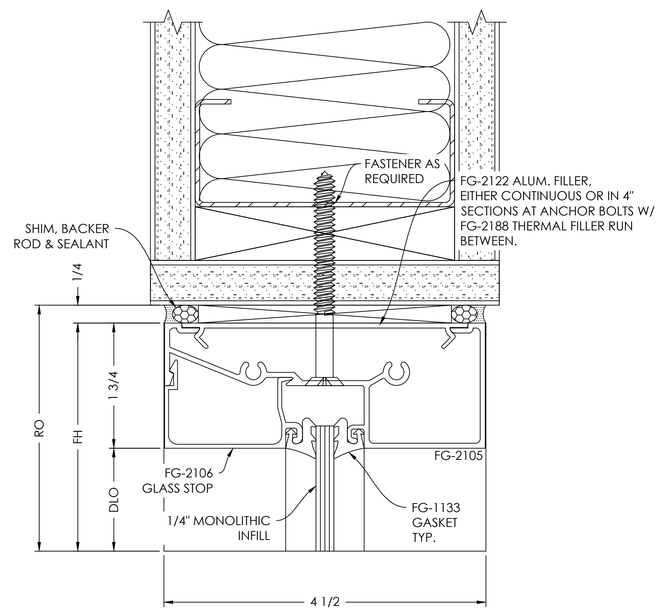

logo

VISION DRAFTING, INC.
shop drawings + engineering
TEL. (470) 406-8783
RGRAHAM@VISIONDRAFTING.NET
WWW.VISIONDRAFTING.NET

PRINTS ISSUED FOR	DATE	BY	REVISION NO.	DATE	BY
1ST APPROVAL	06/24/2024	B.G.			

ARCHITECT/LOCATION
name
address

PROJECT NAME/LOCATION
project name
address

JOB NO. 316

SCALE: 1:1

SHEET NO. DETAILS 505